LC1P91F/LC1P96F

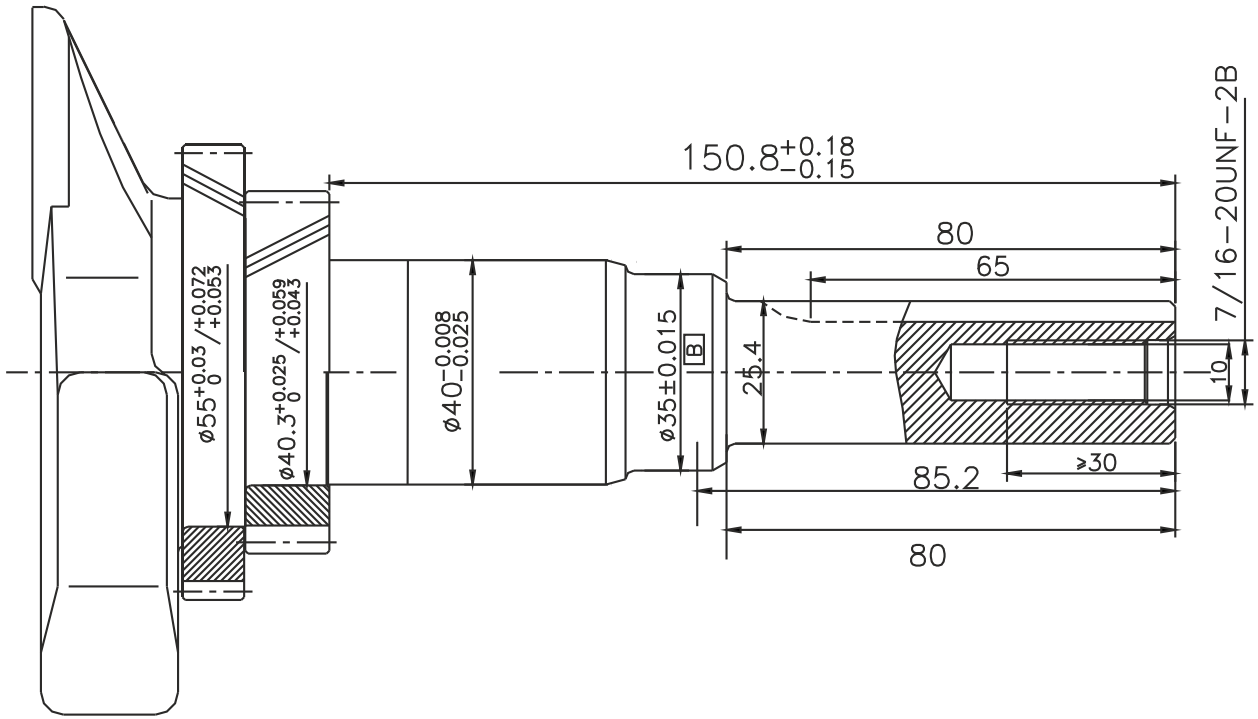

Тип A