130300472

A

其余 Undefined

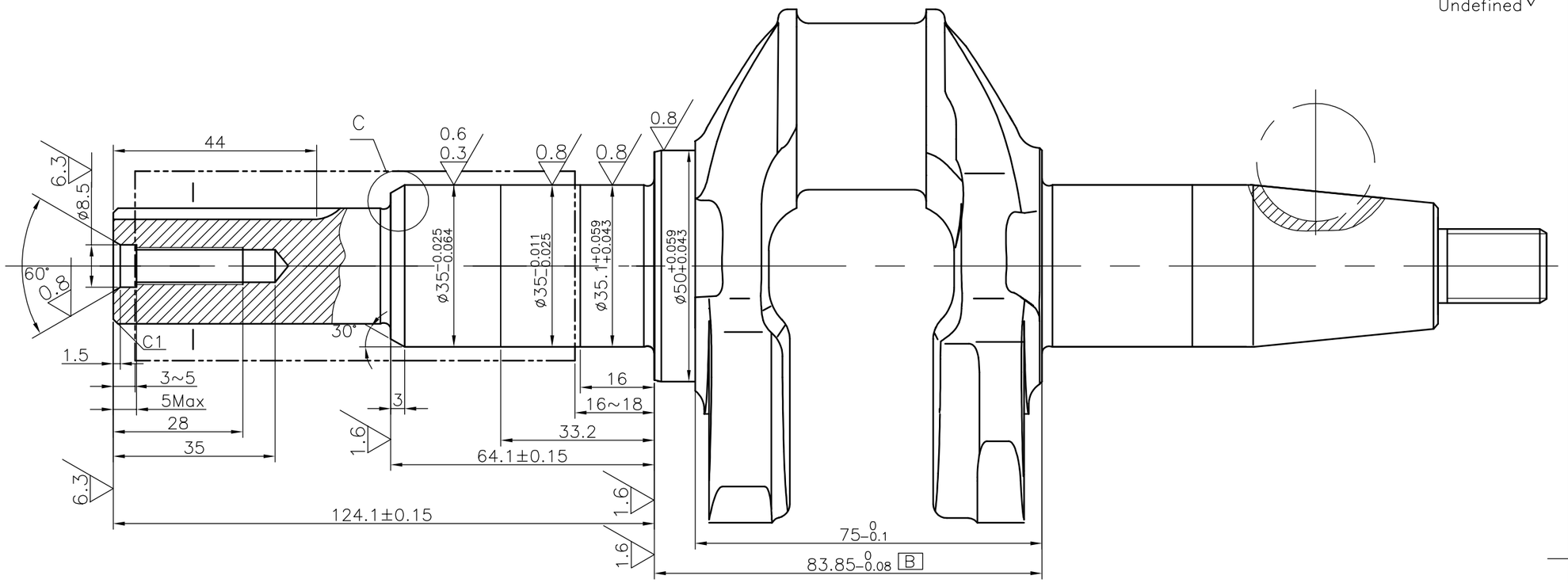

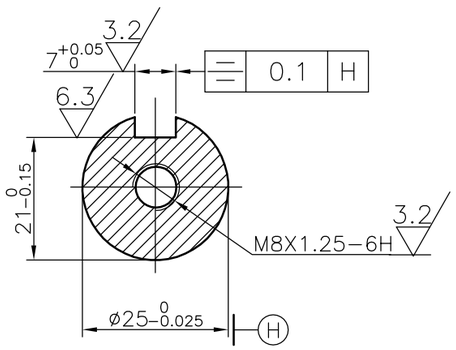

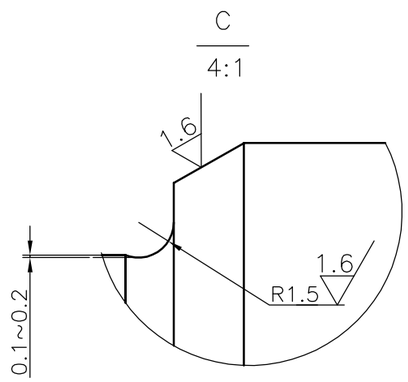

Technical Requirements

1.The crankshaft blank should go through normalizing,then arden+temper to 207HBS~302HBS,and hardness difference on the same blank ≤ 50HB,After treatment, the metallographic structure of the blank is sorbite, which should be of grade 1~4 in conformity with GB/T13320 shotblasting or blast sanding after quenching and tempering;

2.Induction harden(high frequency) +temper;flat keyway:depth 0.8~1.8, Hardness 500HV500g~600HV500g@0.05;others:depth 1~3,Hardness 500HV500g~600HV500g@0.05;then temperring;Apolished transverse section of sample should be maeasured using a microhardness tester with a 500 gram load,the effective case depth is the distance from the surface to the depth at which hardness of 400HV500g;

3.this picture is the P.T.O shaft, the detail technical requirement is the same as 130300434-T196 the shaft's .

技术要求

1.毛坯经正火处理后进行调质处理,其调质硬度207HBS～302HBS，同一根曲轴硬度差应小于或等于50HBS。调质后基体的金相显微组织为索氏体，按GB/T13320评定，表面向芯部6内1～4级,芯部组织1～5.5级,调质后应做喷丸或喷砂等处理；

2.热处理：双点划线处高频淬火,平键槽:淬硬层深0.8～1.8，硬度500HV500g～600HV500g；其余硬化层深度1～3，硬度500HV500g～600HV500g；高频淬火后应进行去应力回火;取径向切割试样，抛光后用载荷为500g的显微硬度计测量，表面硬度在距表面0.05处测量，有效硬化层深度是指表面到硬度400HV500g处的距离；

3.本图为曲轴输出端，详细技术要求参见130300434-T196曲轴图纸。

供应商会签

标记 Mark	处数 Places	分区 Area	更改文件号 Amended Document No.	签名 Signature	年月日 Date

	签名 Signature	年月日 Date		签名 Signature	年月日 Date
设计 Designed by	曾虎子	20200605	标准 Standard	张卉	20200608
校对 Checked by	曾勇	20200605	审核 Audited by	戴瑞义	20200608
工艺 Technics	杨二车	20200606	批准 Approved by	景华阳	20200608

40Cr GB/T3077

图样标记 Drawing Marking				图幅 Size	质量(g) Mass	比例 Scale
S	A		a	A3		1:1

共 1 张 Sheet 1　第 1 张 Sheet 1

130300472　T19600

曲轴（A轴）
Crankshaft

隆鑫通用动力股份有限公司
通机事业部
LONCIN MOTOR CO., LTD.
General Purpose Engine Division

PDF created with pdfFactory Pro trial version www.pdffactory.com